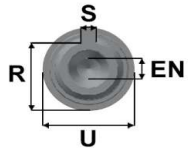

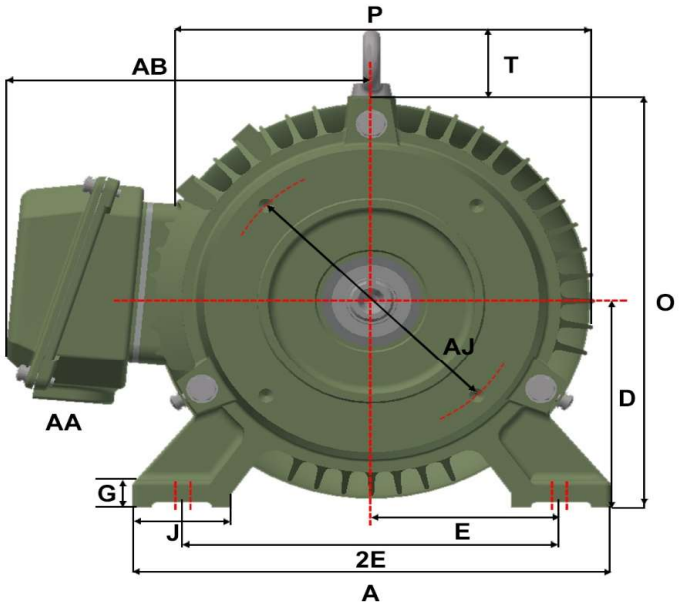

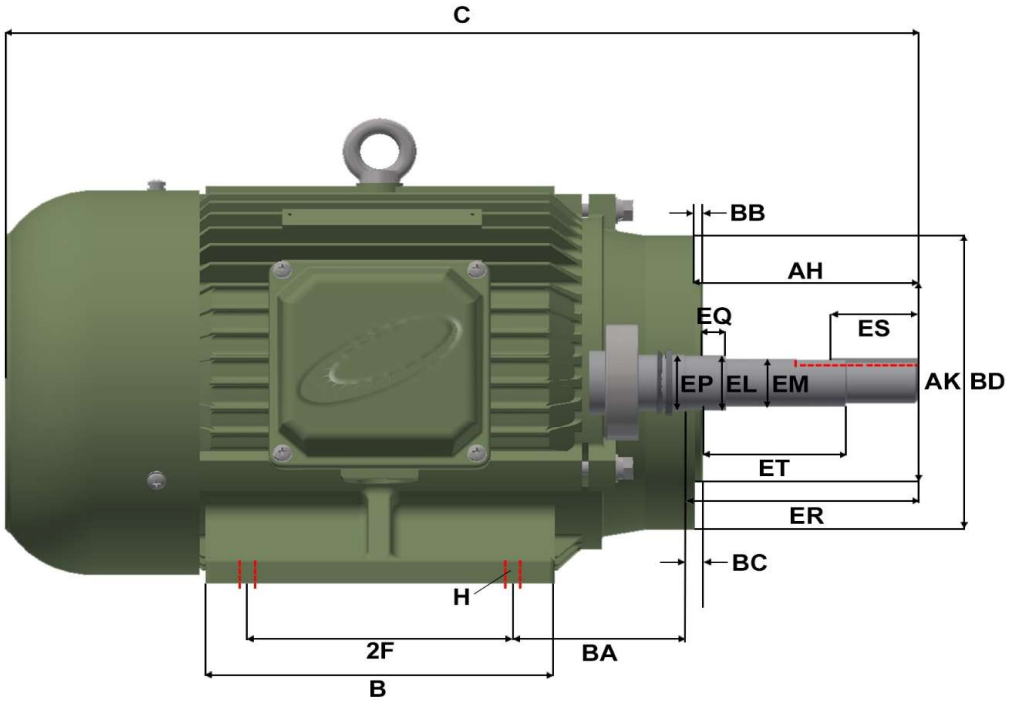

Version: 2WTI	Revised: 26-01-2023	HP	RPM	FRAME	ENCLOSURE	JMPP/JMQP-38
Customer is responsible in determining that MEP product will fit/perform suitably in the intended application		15	1200	284JM	TEFC	

A	B	C	D	E	2E	2F		G	H	J	O	P	R
14.00	13.20	27.47	7.00	5.50	11.00	9.50		0.85	0.53	2.75	14.50	14.00	1.112-1.097
S	**T**	**U**	**AA**	**AB**	**AH**	**AJ**	**AK**	**BA**	**BB**	**BC**	**BD**	**EL**	**EM**
0.252-0.250	2.20	1.2495-1.2490	1.50	11.30	5.25	11.00	12.500-12.495	4.75	0.312-0.250	0.25	14.00	1.750-1.748	1.3750-1.3745
EN	**EP**	**EQ**	**ER**	**ES**	**ET**								
1/2-13	2.16	0.640-0.610	5.281-5.219	2.53	3.020-2.980								